BUGATI CL Open Impeller Stainless Steel Pump

CL pumps combine the advantages of open impeller with SUS304 stainless steel construction, which is particularly suited for handling moderately aggressive liquids with suspended solids.



APPLICATIONS

* Industrial circulation systems.
* Food industrial systems.
* Industrial washing.
* Cold & hot water boosting.

SPECIFICATIONS

* Open impeller handles solids up to **19 mm**.
* Max delivery up to **1100 L/Min**.
* Max head up to **18 meter**.
* Max operating pressure up to **8 Bar**.
* With TEFC **continuous duty** motor.
* Max temperature **80˚C**.
* **Class F** insulation.
* **IP 55** protection.

MATERIALS

* Pump casing - SUS 304
* Back cover - SUS 304
* Impeller - SUS 304
* Shaft - SUS 304
* Motor casing - Aluminium alloy

Water test temperature: 20℃, performance limits:ISO2548C specifications for standard class C pumps.

Model		Power		Capacity n=2900rpm									
Single phase 230V/50HZ	Three phase 415V/50HZ	kW	HP	m^3/h	6	12	18	24	33	42	48	57	66
				l/min	100	200	300	400	550	700	800	950	1100
				Head (m)									
CL150M	**CL150**	1.1	1.5		9.5	8.8	7.8	6.7	5				
CL200M	**CL200**	1.5	2.0		12.7	12	11.2	10	8.3	6.5			
--	**CL300**	2.2	3.0		15	14	13.5	12.7	11.2	9.8	8.9	7.5	
--	**CL400**	3.0	4.0		17.5	16.8	16	15.2	14	12.5	11.5	9.7	7.5

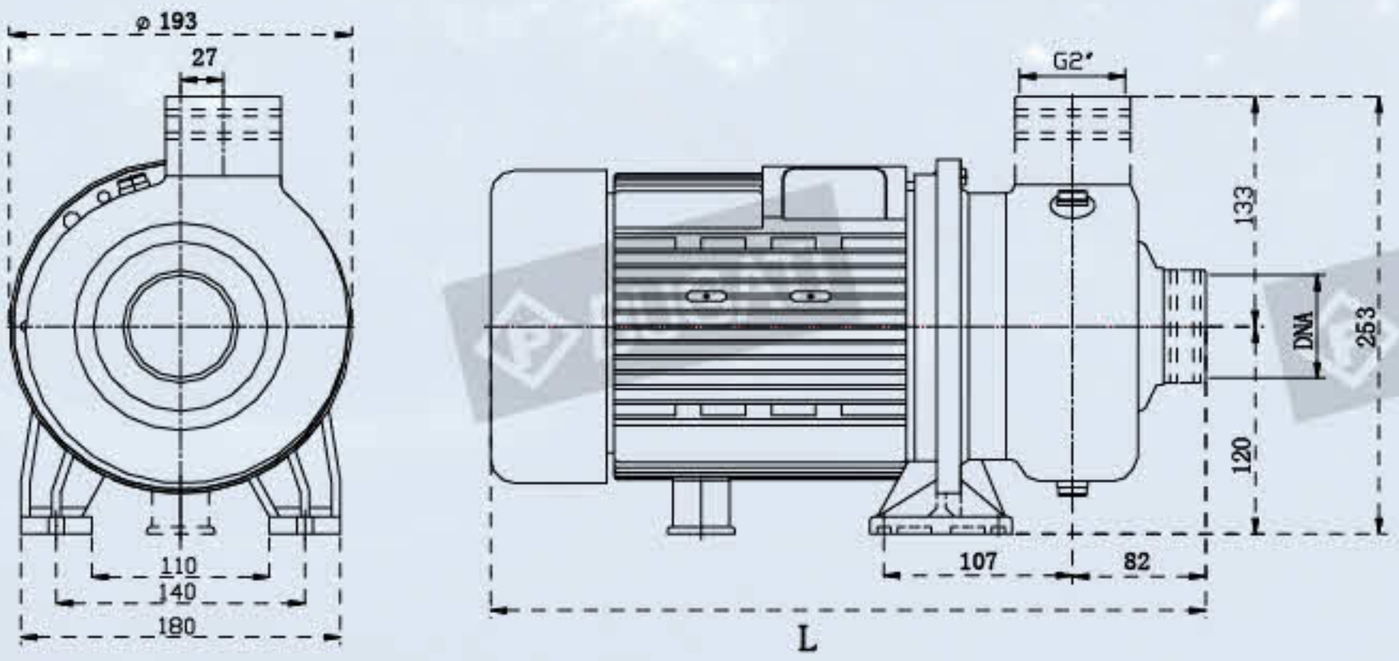

Model	L	DNA
CL150	364	G2"
CL200	364	G2"
CL300	390	G2-1/2"
CL400	390	G2-1/2"