VERTICAL IN-LINE MULTISTAGE PUMP

CVM & CVMS

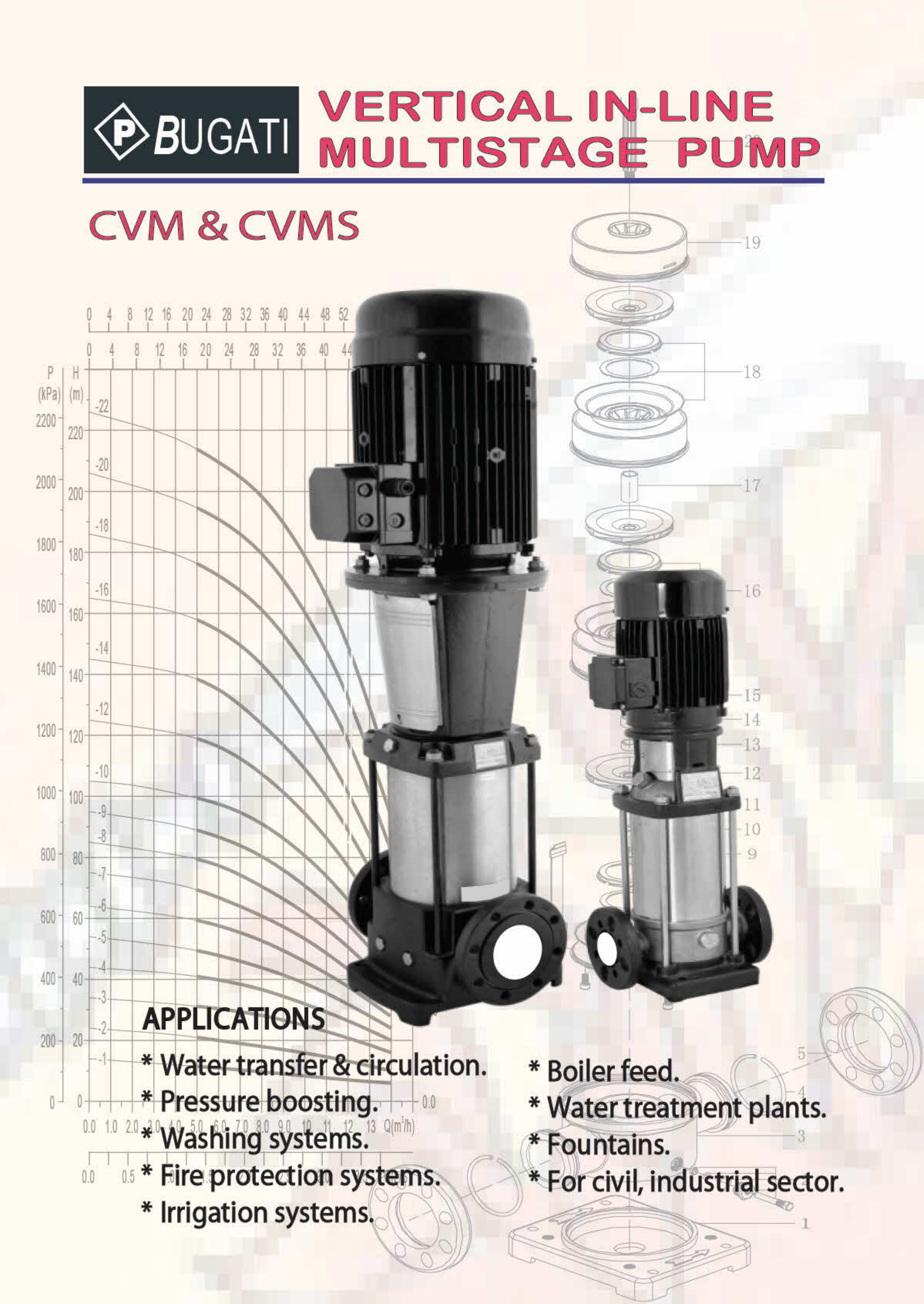

APPLICATIONS

* Water transfer & circulation.
* Pressure boosting.
* Washing systems.
* Fire protection systems.
* Irrigation systems.
* Boiler feed.
* Water treatment plants.
* Fountains.
* For civil, industrial sector.

BUGATI CVM Vertical Multistage Pump

Performance table

Model	Power P2(kW)	Q (m^3/h)	1.0	1.2	1.6	2.0	2.4	2.8	3.2	3.5
CVM 2-2	0.37	H (m)	16	15.5	14.5	13.5	12.5	11	9.5	8
CVM 2-3	0.37		23	22.5	21	20	18.5	16	14	12
CVM 2-4	0.55		32	31	30	28	26	23	20	16
CVM 2-5	0.55		42.5	42	40	37	34.5	30	25	20
CVM 2-6	0.75		51	50	47	44	41	36	30	24
CVM 2-7	0.75		59	57	55	52	47	41	35	28
CVM 2-9	1.1		72	71	67	63	58	51	44	36
CVM 2-11	1.1		87	85	80	74	67	59	50	42
CVM 2-13	1.5		106	104	99	90	81	71	60	51
CVM 2-15	1.5		121	119	112	105	96	85	72	61
CVM 2-18	2.2		143	139	133	125	116	105	91	78
CVM 2-22	2.2		173	169	162	152	140	126	110	95
CVM 2-26	3.0		206	201	191	180	170	155	133	118

Installation sketch

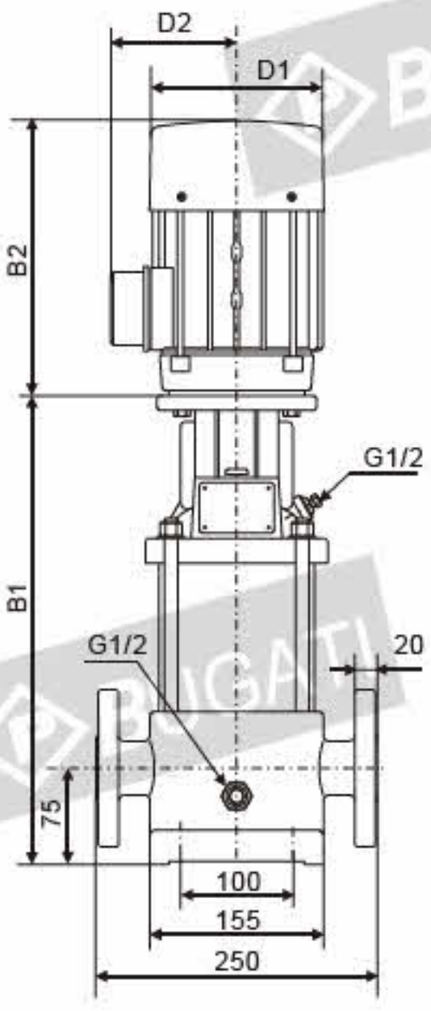

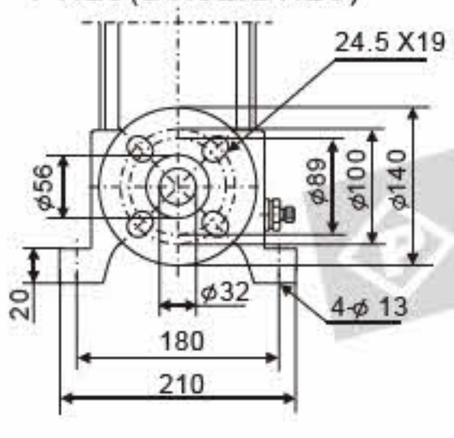

Model	Size(mm)					Weight (kg)
	B1	B2	B1+B2	D1	D2	
CVM 2-2	262	205	467	133	102	22
CVM 2-3	280	205	485	133	102	22
CVM 2-4	298	205	503	133	102	25
CVM 2-5	316	205	521	133	102	25
CVM 2-6	334	205	539	133	102	27
CVM 2-7	352	205	557	133	102	27
CVM 2-9	394	241	635	154	111	29
CVM 2-11	430	241	671	154	111	29
CVM 2-13	466	293	759	154	111	32
CVM 2-15	502	293	795	154	111	32
CVM 2-18	558	293	851	177	116	38
CVM 2-22	630	293	923	177	116	43
CVM 2-26	702	293	977	177	116	48

BUGATI CVM Vertical Multistage Pump

Performance Curve

