VERTICAL IN-LINE MULTISTAGE PUMP



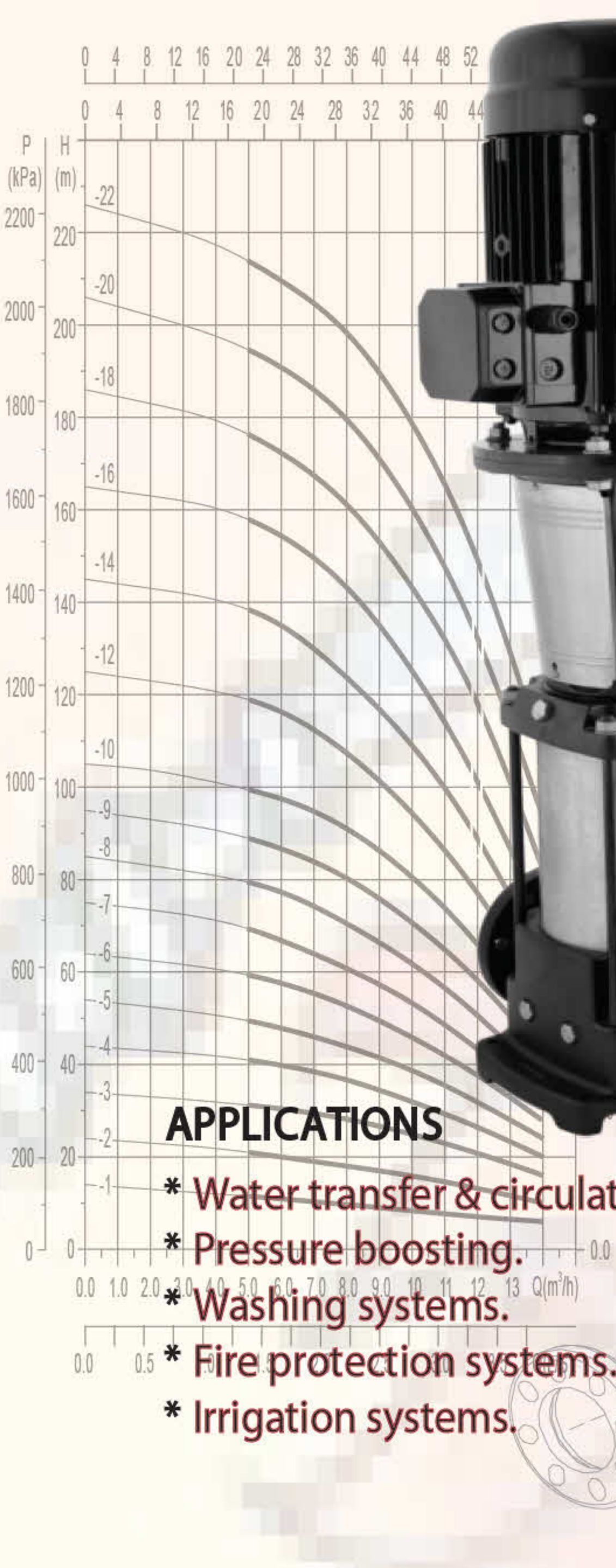

APPLICATIONS

* Water transfer & circulation.
* Pressure boosting.
* Washing systems.
* Fire protection systems.
* Irrigation systems.
* Boiler feed.
* Water treatment plants.
* Fountains.
* For civil, industrial sector.

BUGATI CVM Vertical Multistage Pump

Performance Curve

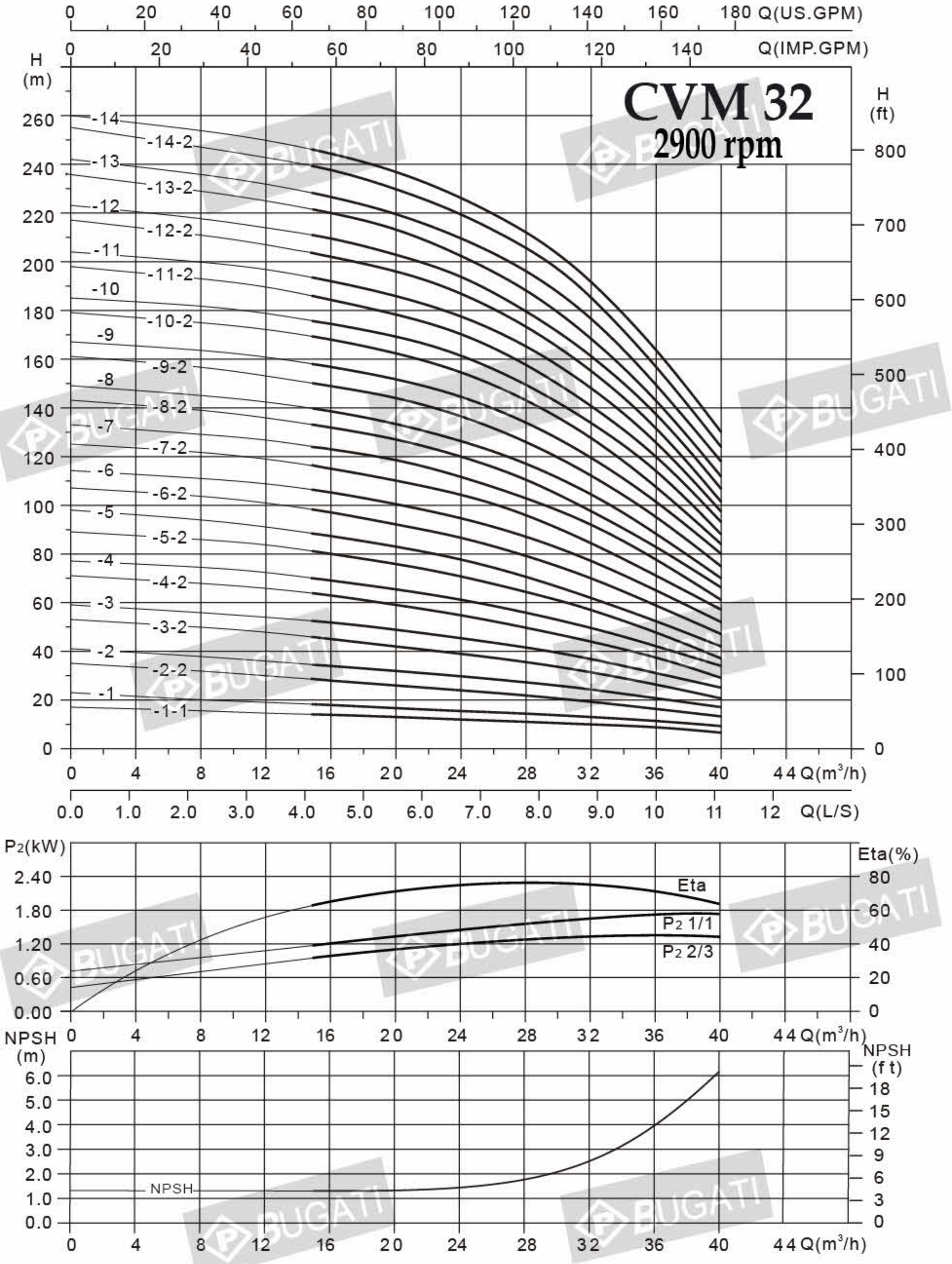

BUGATI CVM Vertical Multistage Pump

Performance table

Model	Power P2(kW)	Q (m^3/h)	12	16	20	24	28	30	32	36	40
CVM32-1-1	1.5		14.5	14	13	12	11	10.5	10	9	7
CVM 32-1	2.2		19	18	16.5	15.5	14.5	14	13	11.5	9.5
CVM 32-2-2	3.0		30	28	26	24	22	21	19	16	14
CVM 32-2	4.0		36	34	32	30	27	26	24	21	17
CVM 32-3-2	4.0		48	45	42	39	36	34	32	27	21
CVM 32-3	5.5		54	52	49	46	42	39	37	31	25
CVM 32-4-2	7.5		66	63	59	55	50	47	44	38	29
CVM 32-4	7.5		72	69	66	62	56	53	50	42	34
CVM 32-5-2	11		84	80	76	71	64	61	57	48	37
CVM 32-5	11		91	87	83	78	71	66	62	53	42
CVM 32-6-2	11		101	97	92	87	79	75	70	59	47
CVM 32-6	11		109	105	101	95	87	83	77	65	52
CVM 32-7-2	15	H (m)	119	115	110	105	96	90	84	71	57
CVM 32-7	15		127	123	118	112	103	97	91	78	61
CVM 32-8-2	15		136	132	127	120	110	104	97	82	66
CVM 32-8	15		143	139	134	126	117	111	104	88	70
CVM 32-9-2	18.5		153	149	144	137	126	119	112	95	75
CVM 32-9	18.5		161	157	152	145	134	126	119	102	80
CVM 32-10-2	18.5		172	168	162	154	143	135	127	108	84
CVM 32-10	18.5		179	174	169	162	149	142	134	114	88
CVM 32-11-2	22		189	184	178	170	158	149	141	120	93
CVM 32-11	22		197	192	186	178	165	157	148	126	97
CVM 32-12-2	22		207	202	196	187	174	165	155	132	102
CVM 32-12	22		214	210	203	194	180	171	161	137	107
CVM 32-13-2	30		225	220	213	203	188	179	169	143	112
CVM 32-13	30		232	227	220	210	197	187	177	150	118
CVM 32-14-2	30		243	238	230	220	206	197	185	156	124
CVM 32-14	30		250	245	237	227	212	203	192	163	130

BUGATI CVM Vertical Multistage Pump

CVM 32

Installation sketch

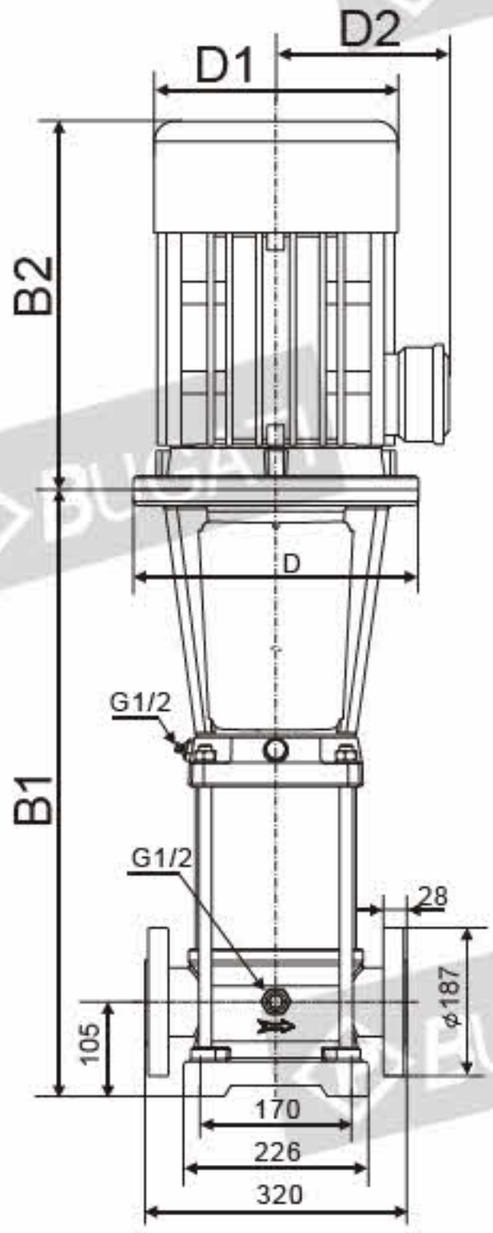

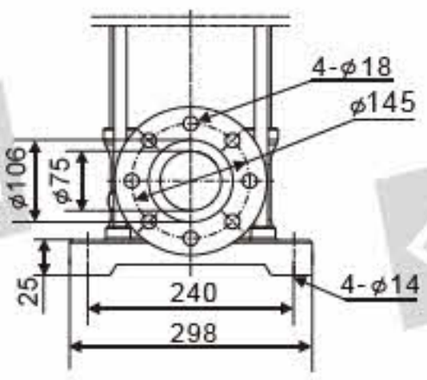

Size and weight

Model	Size(mm)						Weight (kg)
	B1	B2	B1+B2	D	D1	D2	
CVM32-1-1	455	241	696	-	154	111	60
CVM32-1	455	275	730	-	177	116	61
CVM32-2-2	525	293	800	-	177	116	75
CVM32-2	525	305	830	-	197	148	86
CVM32-3-2	595	305	900	-	197	148	105
CVM32-3	620	390	1010	300	275	210	105
CVM32-4-2	690	390	1080	300	275	210	116
CVM32-4	690	390	1080	300	275	210	117
CVM32-5-2	915	505	1420	350	330	255	170
CVM32-5	915	505	1420	350	330	255	171
CVM32-6-2	985	505	1490	350	330	255	176
CVM32-6	985	505	1490	350	330	255	176
CVM32-7-2	1055	505	1560	350	330	255	206
CVM32-7	1055	505	1560	350	330	255	207
CVM32-8-2	1125	505	1630	350	330	255	208
CVM32-8	1125	505	1630	350	330	255	209
CVM32-9-2	1195	560	1750	350	330	255	225
CVM32-9	1195	560	1750	350	330	255	226
CVM32-10-2	1265	560	1820	350	330	255	230
CVM32-10	1265	560	1820	350	330	255	231
CVM32-11-2	1335	590	1925	350	380	280	270
CVM32-11	1335	590	1925	350	380	280	271
CVM32-12-2	1405	590	1995	350	380	280	275
CVM32-12	1405	590	1995	350	380	280	276
CVM32-13-2	1475	660	2135	400	420	305	395
CVM32-13	1475	660	2135	400	420	305	395
CVM32-14-2	1525	660	2185	400	420	305	400
CVM32-14	1525	660	2185	400	420	305	400