VERTICAL IN-LINE MULTISTAGE PUMP



APPLICATIONS

* Water transfer & circulation.
* Pressure boosting.
* Washing systems.
* Fire protection systems.
* Irrigation systems.
* Boiler feed.
* Water treatment plants.
* Fountains.
* For civil, industrial sector.

BUGATI CVM Vertical Multistage Pump

Model	Power P2(kW)	Q (m^3/h)	50	60	70	80	85	90	100	110
CVM90-1-1	5.5	H (m)	22	20	18	16	15	13	10	6
CVM90-1	7.5		30	27	25	23	21	19	15	11
CVM90-2-2	11		41	39	36	32	30	28	22	15
CVM90-2	15		56	53	49	45	43	40	35	30
CVM90-3-2	18.5		68	65	60	55	52	49	41	33
CVM90-3	22		83	79	73	67	64	61	54	47
CVM90-4-2	30		98	93	87	80	76	72	62	50
CVM90-4	30		110	105	100	92	88	84	75	65
CVM90-5-2	37		126	120	113	105	100	95	83	68
CVM90-5	37		140	133	126	117	113	107	95	83
CVM90-6-2	45		155	148	139	129	124	118	104	87
CVM90-6	45		168	160	151	141	135	130	117	103

Installation sketch

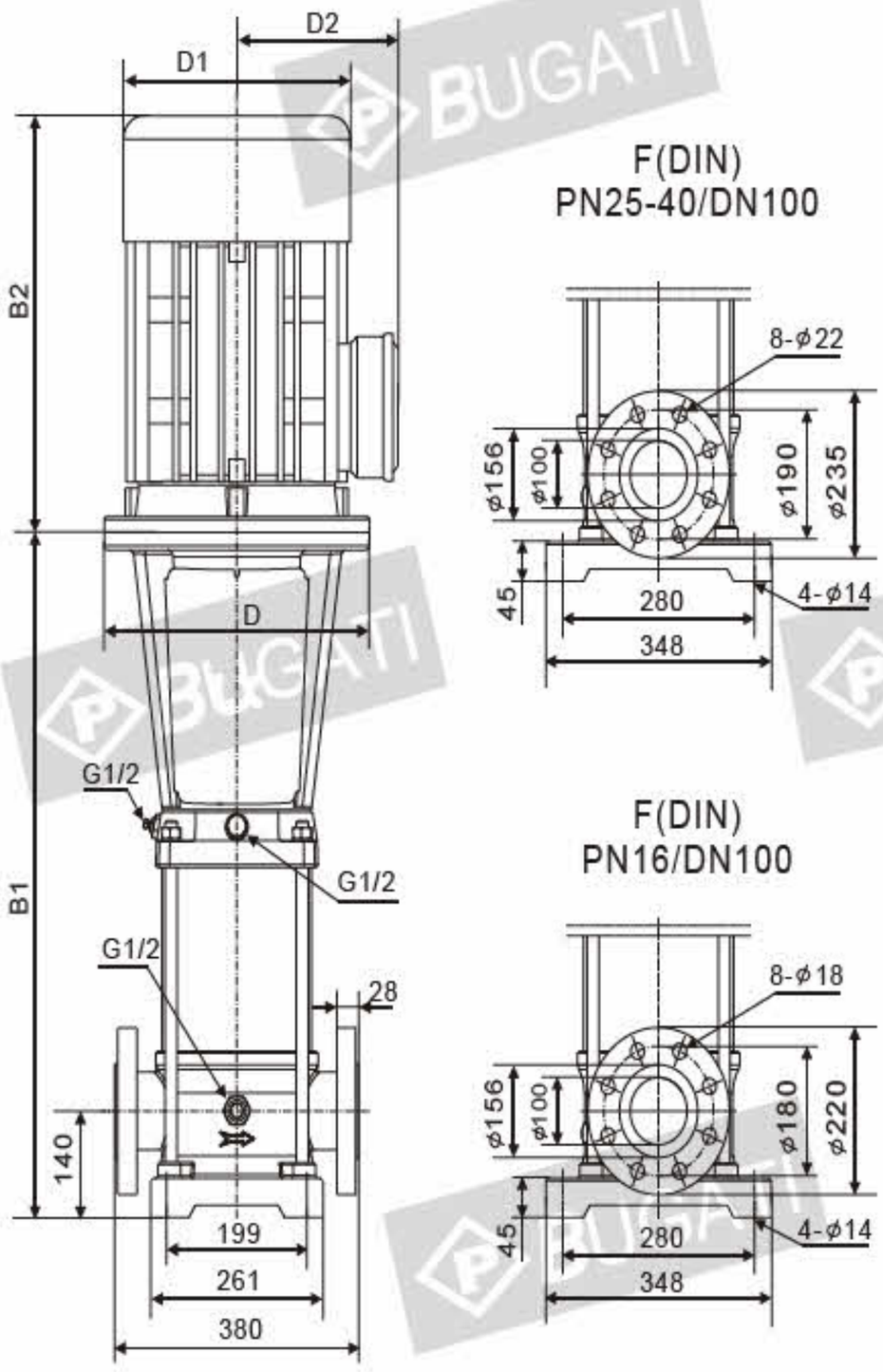

Model	Size(mm)						Weight (kg)
	B1	B2	B1+B2	D	D1	D2	
CVM90-1-1	571	430	1001	300	260	208	120
CVM90-1	571	430	1001	300	260	208	122
CVM90-2-2	773	490	1263	350	330	255	165
CVM90-2	773	490	1263	350	330	255	198
CVM90-3-2	865	550	1415	350	330	255	212
CVM90-3	865	590	1455	350	360	285	265
CVM90-4-2	957	660	1417	400	420	310	348
CVM90-4	957	660	1617	400	420	310	348
CVM90-5-2	1049	660	1709	400	420	310	375
CVM90-5	1049	660	1709	400	420	310	375
CVM90-6-2	1141	700	1841	450	470	345	438
CVM90-6	1141	700	1841	450	470	345	438

BUGATI CVM Vertical Multistage Pump

Performance Curve

